OMGATES
ACESS CONTROL



CANOPUS
OMGATES

The future is now... The world's first access control tripod with integrated AI modules. Our high-end range with a 5-year warranty and maximum safety, integrating sensors, side access lights and cutting-edge technology from OMGATES.

5-YEAR WARRANTY



Canopus OMGATES black design.



Canopus OMGATES white design.



Appearance color can be customized based on installation environment.

OPTIONAL MODULES

AI MODULE

Can answer questions, modules can be added for counting people, validating group tickets, multilingual voice support with programmable interactive avatar (optional) that can also translate languages (optional).

PAYMENT MODULES

DIGITAL SIGNAGE MODULE

To advertise the products you want on the turnstile screens. Our software allows each screen to be controlled individually and independently.

SCREEN

Android 4G WiFi Bluetooth UHF 1D Barcode 2D Barcode PSAM NFC Fingerprint Camera GPS

The turnstile has a built-in rugger tablet IP67 with capacity touch panel, Android 13.

It has a powerful Octa-core CPU, 8-inch HD display, IP88, V8700 mAh battery and extensive data capture options such as UHF-RFID, barcode scanning, NFC fingerprint recognition, etc.



DIGITAL SIGNAGE

CONTROL AND PUBLISH YOUR OWN CONTENT AND CUSTOMISE IT.

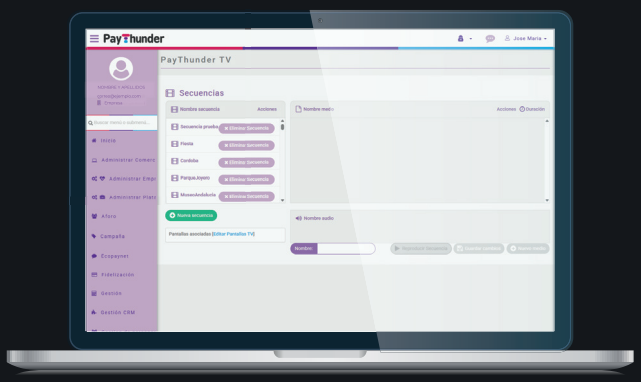

What is displayed on the screens and how is it managed?

The operator can manage the content to be displayed on the screens in just one minute from the system administration. The content to be displayed can be: videos, images, web, etc.

The system allows combinations of all these elements, creating 'sequences' to be displayed on the screens.

FEATURES

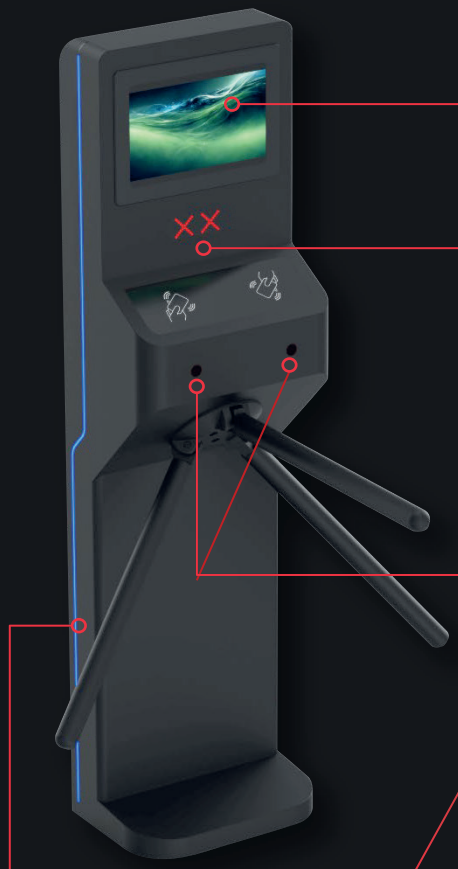

LCD DISPLAY

HC LCD display, supports project advertising and company promotional information.

ACCESS LIGHTS

Two types indicator lights:

: power on or invalid card.

: swipe valid card.

INFRARED SENSOR

2 sensors, number is optional, prevent unauthorized personnel from entering.

SIDE ACCESS LIGHTS

Product body is embedded with light strip. Blue, green and red lights can change with swiping valid/invalid card.

Remote Control · Touchless Button · Card · QR Code · Fingerprint · Palm Vein

TECHNICAL SPECIFICATIONS

FRAME MATERIAL	Automotive - grade high - end spray paint.
ARM MATERIAL	Automotive - grade high - end spray paint.
DIMENSIONS	270 * 360 * 1355 mm
NET WEIGHT	70 kg/pcs.
PASSAGE WIDTH	550 mm (arm 500 mm).
PASSING DIRECTION	Unidirectional / Bidirectional.
MCBF	15 million.
POWER SUPPLY	AC220V/110V, 50/60Hz.
OPERATING VOLTAGE	24V DC.
POWER CONSUMPTION	40W.
OPERATION TEMPERATURE	-20°c to 75°C.
OPERATION HUMIDITY	0 ~ 95% (No freeze).
WORKING ENVIRONMENT	Indoor use.
FLOW RATE	35 people per minute.
INFRARED SENSOR	2 (standard).
COMMUNICATION	Dry contact, Relay signal, RS485.
FLEXIBILITY	Integrate with any access control.

DIMENSIONS

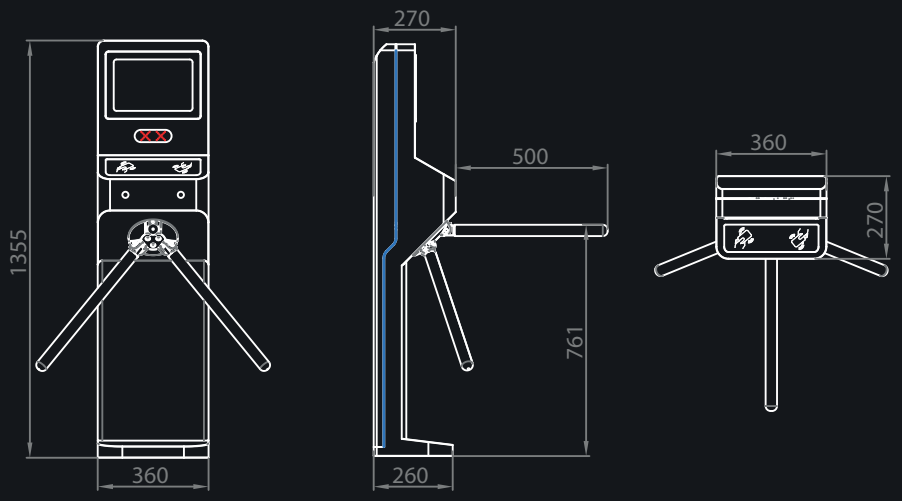

FRONT VIEW SIDE VIEW TOP VIEW